Current Sensor

Product Series： STK-PL/M

Part number：
STK-80PL/M
STK-100PL/M
STK-120PL/M
STK-150PL/M
STK-180PL/M

Version: Ver1.1

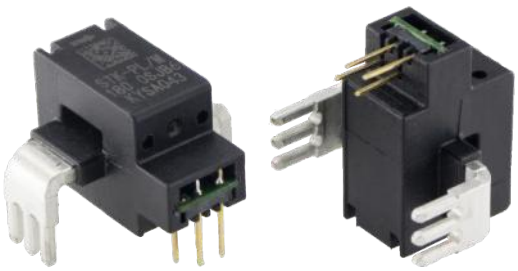

Sinomags Technology Co., Ltd

Web site: www.sinomags.com

CONTENT

1. Summary

The STK-PL/M series is based on hall (Tunneling-Magnetoresistance) technology and open-loop design. It is suitable for DC, AC, pulsed and any kind of irregular current measurement under the isolated conditions. The nominal current range of the STK-PL/M current sensor consists of 80A,100A,120A, 150A,180A.

Typical applications

- PV combiner box
- PV inverter (MPPT & AC)
- motor driver controller
- SMPS & UPS
- Battery management system

Standards

- EN50178:1997
- IEC 61010-1:2010
- IEC 61326-1:2012

General parameter

Parameter	Symbol	Unit	Value
Working temperature	T_A	℃	-40 ~ 105
Storage temperature	T_stg	℃	-40 ~ 105
Mass	m	g	10

Absolute maximum rating

Parameter	Symbol	Unit	Value
Supply voltage（non-destructive）	V_C	V	6.0
ESD rating（HBM）	U_{ESD}	kV	4
ESD rating（CDM）	U_{CDM}	kV	1.5

Remark: the unrecoverable damage may occur when the product works on the conditions over the absolute maximum ratings. Long-time working on the absolute maximum ratings may cause the degradation on performance and reliability.

Ratings

Parameter	Symbol	Unit	Value
Primary involved potential		V AC/DC	600
Ambient operating temperature	T_A	℃	105
Primary current	I_p	A	According to series primary current
Secondary supply voltage	U_c	V DC	5
Output voltage	V_out	V	0.1 ~ 4.9

Isolation parameter

Parameter	Symbol	Unit	Value	Comment
RMS voltage for AC test 50Hz/1 min	Ud	kV	5	
Impulse withstand voltage 1.2/50μs	Ûw	kV	8	
Clearance distance (pri. -sec)	dCl	mm	8	Shortest distance through air
Creepage distance (pri. -sec)	dCp	mm	8	Shortest path along device body
Case material			V0 according to UL 94	
Application example		V	600	Reinforced insulation, CAT III, PD 2, non uniform field according EN 50178, IEC 61010
Application example		V	1000	Basic insulation, CAT III, PD 2, non uniform field according EN 50178, IEC 61010
Application example		V	1500	Basic insulation, CAT III, PD 2, according to IEC 62109-1 Altitude ≤ 3000 m
Application example		V	600	CAT III, PD 2, according to UL 508

2. STK-80PL/M Electrical performance

Condition：T_A = 25℃ Vcc = 5 V (Except special instructions)

Parameter	Symbol	Unit	Min	Typ	Max	Comment
Primary nominal current rms	I_pn	A		80		
Primary current measuring range	I_pm	A	-200		200	
Supply voltage	Vcc	V	4.75	5	5.25	
Current consumption	Icc	mA		5	10	
Reference voltage	Vref	V	2.48	2.5	2.52	Output function
Rated output voltage	V_FS	V		0.8		(Vout - Vref)@ I_pn
Internal output resistance	R_out	Ω		1		Output
Quiescent voltage	Voff	V	2.48	2.5	2.52	Vout @ 0 A
Electrical offset voltage	Voe	mV	-10		10	(Vout – Vref) @ 0 A
Temperature drift of Voe	Voe_TRange	%V_FS	-1.5		1.5	-40℃ ~ 105℃
Magnetic offset current	I_om	A	-0.25		0.25	@ ±10 x I_pn
Theoretical gain	G_th	mV/A		10		800 mV @ I_pn
Error of gain	Err_G	%G_th		±1		Trimmed in the factory @ 25℃
Temperature drift of gain	G_TR	%G_th	-1.0		1.0	-40℃ ~ 105℃
Rated linearity error	Non-L_pn	%I_pn	-0.5		0.5	±I_pn
Linearity error @ I_pm	Non-L_pm	%I_pm	-3		3	±I_pm
Reaction time	t_ra	μs		0.5		@ 10% of I_pn
Step response time	t_res	μs		1		@ 90% of I_pn
Delay time	t_delay	μs		0.8		500 kHz sine wave
Frequency bandwidth (-3dB)	BW	kHz		500		No RC circuit
Output voltage noise DC ~ 10 kHz DC ~ 100 kHz	Vnoise	mVpp		 10 15		
Accuracy @ 25℃	X	% of I_pn	-1		1	@ 25℃
Accuracy @ -40℃ ~ 105℃	X_TRange	% of I_pn	-2		2	-40℃ ~ 105℃

3. STK-100PL/M Electrical performance

Condition：T_A = 25℃ Vcc = 5 V (Except special instructions)

Parameter	Symbol	Unit	Min	Typ	Max	Comment
Primary nominal current rms	I_pn	A		100		
Primary current measuring range	I_pm	A	-250		250	
Supply voltage	Vcc	V	4.75	5	5.25	
Current consumption	Icc	mA		5	10	
Reference voltage	Vref	V	2.48	2.5	2.52	Output function
Rated output voltage	V_FS	V		0.8		(Vout - Vref)@ I_pn
Internal output resistance	R_out	Ω		1		Output
Quiescent voltage	Voff	V	2.48	2.5	2.52	Vout @ 0 A
Electrical offset voltage	Voe	mV	-10		10	(Vout – Vref) @ 0 A
Temperature drift of Voe	Voe_TRange	%V_FS	-1.5		1.5	-40℃ ~ 105℃
Magnetic offset current	I_om	A	-0.25		0.25	@ ±10 x I_pn
Theoretical gain	G_th	mV/A		8		800 mV @ I_pn
Error of gain	Err_G	%G_th		±1		Trimmed in the factory @ 25℃
Temperature drift of gain	G_TR	%G_th	-1.0		1.0	-40℃ ~ 105℃
Rated linearity error	Non-L_pn	%I_pn	-0.5		0.5	±I_pn
Linearity error @ I_pm	Non-L_pm	%I_pm	-3		3	±I_pm
Reaction time	t_ra	μs		0.5		@ 10% of I_pn
Step response time	t_res	μs		1		@ 90% of I_pn
Delay time	t_delay	μs		0.8		500 kHz sine wave
Frequency bandwidth (-3dB)	BW	kHz		500		No RC circuit
Output voltage noise DC ~ 10 kHz DC ~ 100 kHz	Vnoise	mVpp		 10 15		
Accuracy @ 25℃	X	% of I_pn	-1		1	@ 25℃
Accuracy @ -40℃ ~ 105℃	X_TRange	% of I_pn	-2		2	-40℃ ~ 105℃

4. STK-120PL/M Electrical performance

Condition：T_A = 25℃ Vcc = 5 V (Except special instructions)

Parameter	Symbol	Unit	Min	Typ	Max	Comment
Primary nominal current rms	I_pn	A		120		
Primary current measuring range	I_pm	A	-300		300	
Supply voltage	Vcc	V	4.75	5	5.25	
Current consumption	Icc	mA		5	10	
Reference voltage	Vref	V	2.48	2.5	2.52	Output function
Rated output voltage	V_FS	V		0.8		(Vout - Vref)@ I_pn
Internal output resistance	R_out	Ω		1		Output
Quiescent voltage	Voff	V	2.48	2.5	2.52	Vout @ 0 A
Electrical offset voltage	Voe	mV	-10		10	(Vout – Vref) @ 0 A
Temperature drift of Voe	Voe_TRange	%V_FS	-1.5		1.5	-40℃ ~ 105℃
Magnetic offset current	I_om	A	-0.25		0.25	@ ±10 x I_pn
Theoretical gain	G_th	mV/A		6.667		800 mV @ I_pn
Error of gain	Err_G	%G_th		±1		Trimmed in the factory @ 25℃
Temperature drift of gain	G_TR	%G_th	-1.0		1.0	-40℃ ~ 105℃
Rated linearity error	Non-L_pn	%I_pn	-0.5		0.5	±I_pn
Linearity error @ I_pm	Non-L_pm	%I_pm	-3		3	±I_pm
Reaction time	t_ra	μs		0.5		@ 10% of I_pn
Step response time	t_res	μs		1		@ 90% of I_pn
Delay time	t_delay	μs		0.8		500 kHz sine wave
Frequency bandwidth (-3dB)	BW	kHz		500		No RC circuit
Output voltage noise DC ~ 10 kHz DC ~ 100 kHz	Vnoise	mVpp		 10 15		
Accuracy @ 25℃	X	% of I_pn	-1		1	@ 25℃
Accuracy @ -40℃ ~ 105℃	X_TRange	% of I_pn	-2		2	-40℃ ~ 105℃

5. STK-150PL/M Electrical performance

Condition：T_A = 25℃ Vcc = 5 V (Except special instructions)

Parameter	Symbol	Unit	Min	Typ	Max	Comment
Primary nominal current rms	I_pn	A		150		
Primary current measuring range	I_pm	A	-375		375	
Supply voltage	Vcc	V	4.75	5	5.25	
Current consumption	Icc	mA		5	10	
Reference voltage	Vref	V	2.48	2.5	2.52	Output function
Rated output voltage	V_FS	V		0.8		(Vout - Vref)@ I_pn
Internal output resistance	R_out	Ω		1		Output
Quiescent voltage	Voff	V	2.48	2.5	2.52	Vout @ 0 A
Electrical offset voltage	Voe	mV	-10		10	(Vout – Vref) @ 0 A
Temperature drift of Voe	Voe_TRange	%V_FS	-1.5		1.5	-40℃ ~ 105℃
Magnetic offset current	I_om	A	-0.25		0.25	@ ±10 x I_pn
Theoretical gain	G_th	mV/A		5.333		800 mV @ I_pn
Error of gain	Err_G	%G_th		±1		Trimmed in the factory @ 25℃
Temperature drift of gain	G_TR	%G_th	-1.0		1.0	-40℃ ~ 105℃
Rated linearity error	Non-L_pn	%I_pn	-0.5		0.5	±I_pn
Linearity error @ I_pm	Non-L_pm	%I_pm	-3		3	±I_pm
Reaction time	t_ra	μs		0.5		@ 10% of I_pn
Step response time	t_res	μs		1		@ 90% of I_pn
Delay time	t_delay	μs		0.8		500 kHz sine wave
Frequency bandwidth (-3dB)	BW	kHz		500		No RC circuit
Output voltage noise DC ~ 10 kHz DC ~ 100 kHz	Vnoise	mVpp		 10 15		
Accuracy @ 25℃	X	% of I_pn	-1		1	@ 25℃
Accuracy @ -40℃ ~ 105℃	X_TRange	% of I_pn	-2		2	-40℃ ~ 105℃

6. STK-180PL/M Electrical performance

Condition：T_A = 25℃ Vcc = 5 V (Except special instructions)

Parameter	Symbol	Unit	Min	Typ	Max	Comment
Primary nominal current rms	I_pn	A		180		
Primary current measuring range	I_pm	A	-450		450	
Supply voltage	Vcc	V	4.75	5	5.25	
Current consumption	Icc	mA		5	10	
Reference voltage	Vref	V	2.48	2.5	2.52	Output function
Rated output voltage	V_FS	V		0.8		(Vout - Vref)@ I_pn
Internal output resistance	R_out	Ω		1		Output
Quiescent voltage	Voff	V	2.48	2.5	2.52	Vout @ 0 A
Electrical offset voltage	Voe	mV	-10		10	(Vout – Vref) @ 0 A
Temperature drift of Voe	Voe_TRange	%V_FS	-1.5		1.5	-40℃ ~ 105℃
Magnetic offset current	I_om	A	-0.25		0.25	@ ±10 x I_pn
Theoretical gain	G_th	mV/A		4.444		800 mV @ I_pn
Error of gain	Err_G	%G_th		±1		Trimmed in the factory @ 25℃
Temperature drift of gain	G_TR	%G_th	-1.0		1.0	-40℃ ~ 105℃
Rated linearity error	Non-L_pn	%I_pn	-0.5		0.5	±I_pn
Linearity error @ I_pm	Non-L_pm	%I_pm	-5		5	±I_pm
Reaction time	t_ra	μs		0.5		@ 10% of I_pn
Step response time	t_res	μs		1		@ 90% of I_pn
Delay time	t_delay	μs		0.8		500 kHz sine wave
Frequency bandwidth (-3dB)	BW	kHz		500		No RC circuit
Output voltage noise DC ~ 10 kHz DC ~ 100 kHz	Vnoise	mVpp		 10 15		
Accuracy @ 25℃	X	% of I_pn	-1		1	@ 25℃
Accuracy @ -40℃ ~ 105℃	X_TRange	% of I_pn	-2		2	-40℃ ~ 105℃

7. Output voltage VS primary current

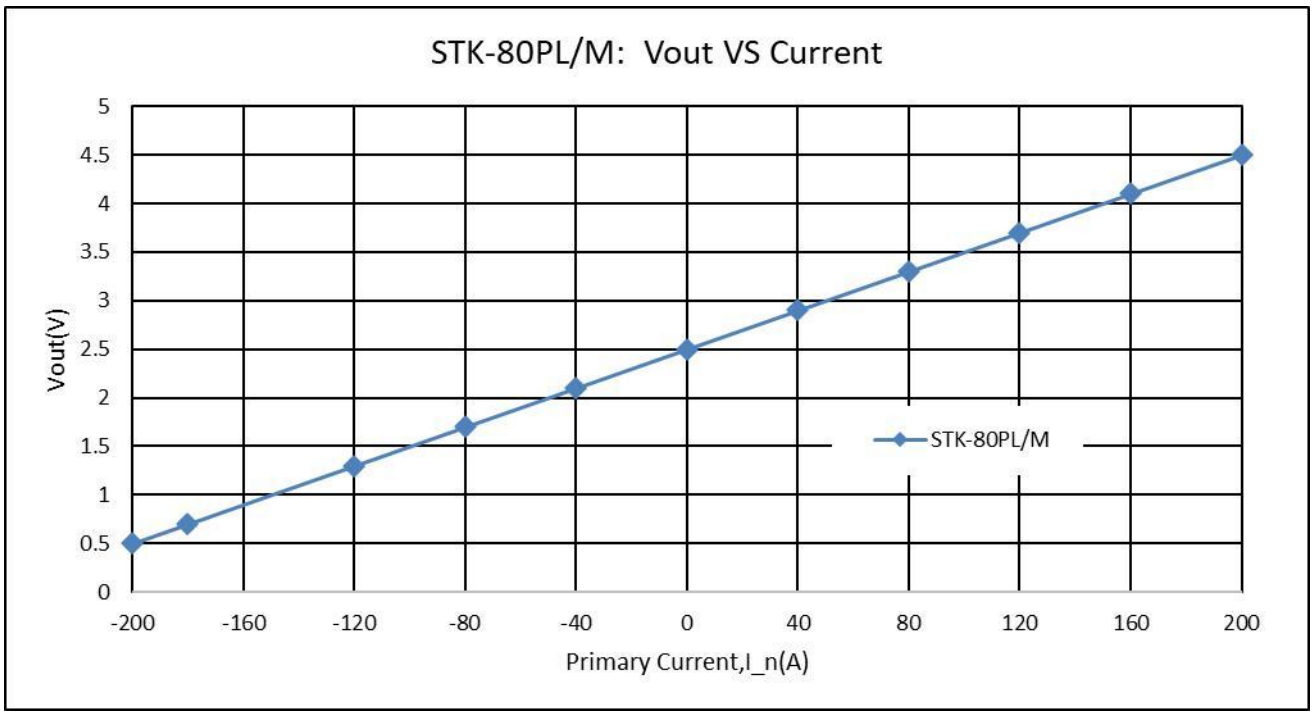

The dependence of Vout of STK-80PL/M on the primary current.

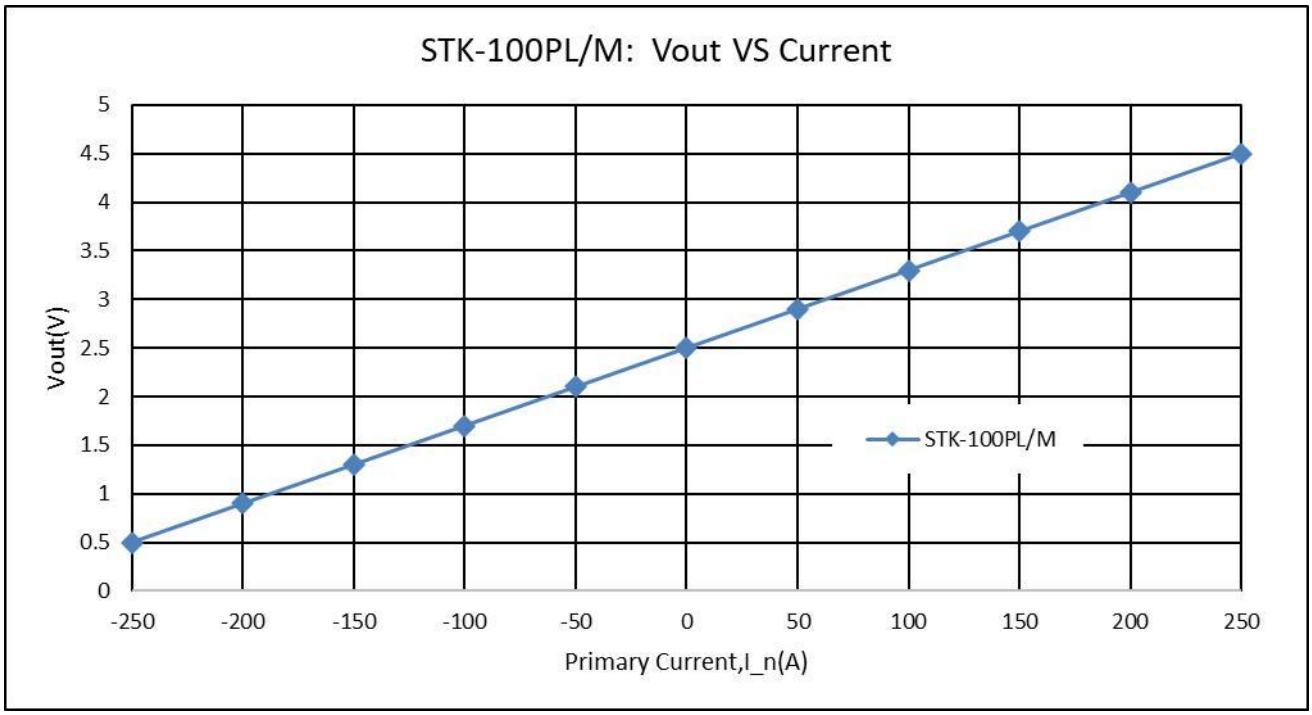

The dependence of Vout of STK-100PL/M on the primary current.

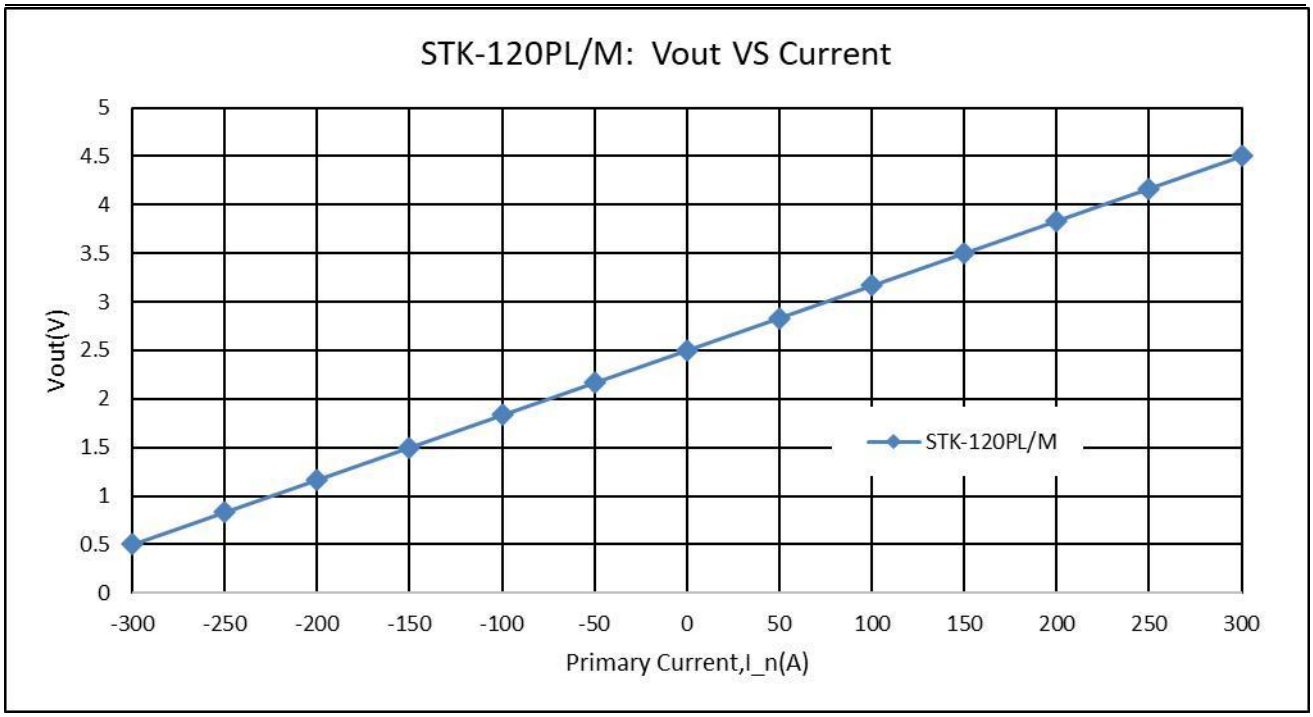

The dependence of Vout of STK-120PL/M on the primary current.

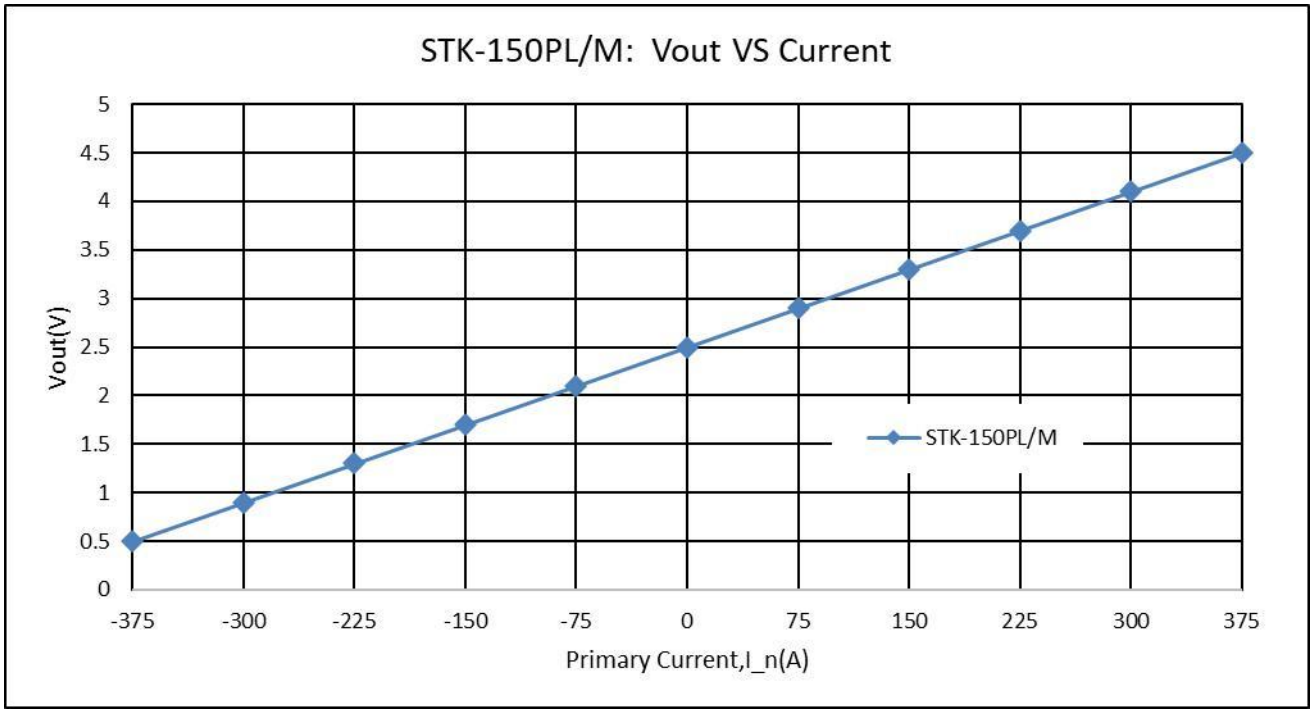

The dependence of Vout of STK-150PL/M on the primary current.

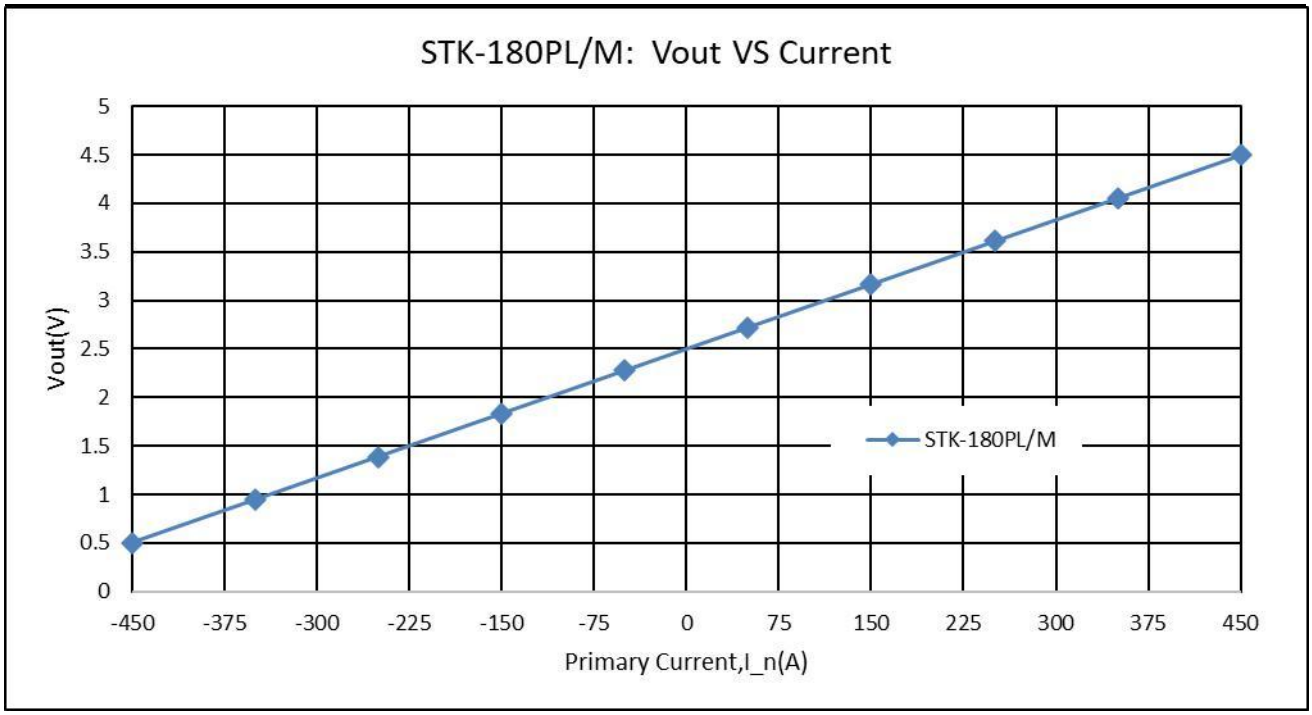

The dependence of Vout of STK-180PL/M on the primary current.

8. Accuracy characteristics in room temperature

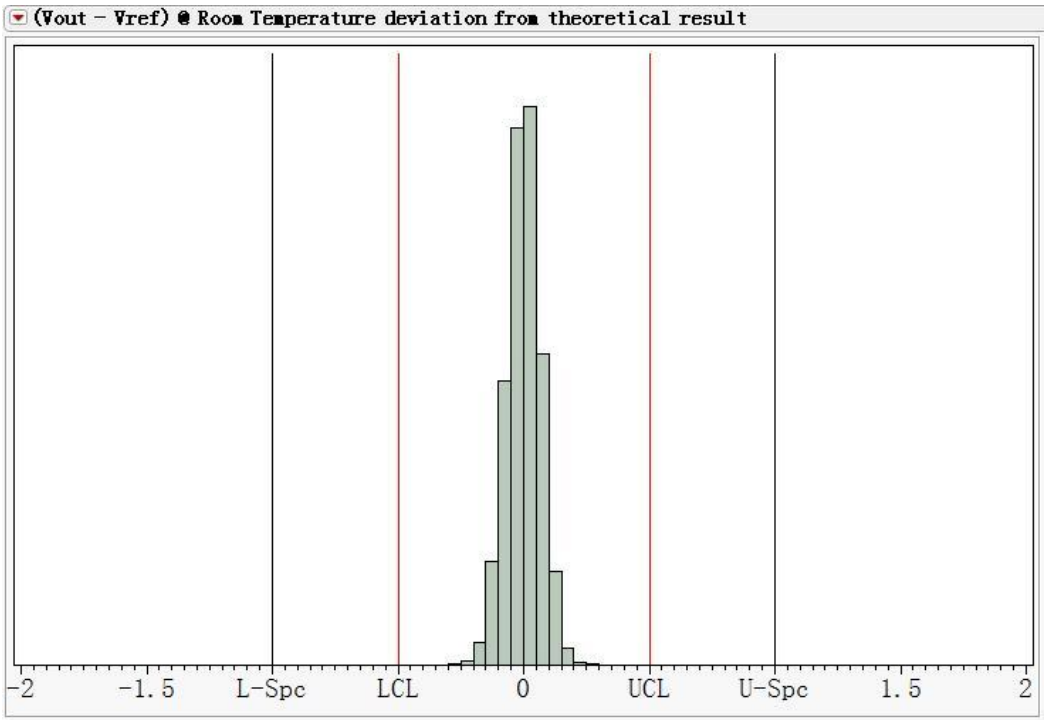

The error of STK-PL/M current sensor at 25 ℃ compared with the standard output， ((Vout – Vref)_measure @ I_n @ 25℃–Voe@25℃ – G_th * In) / V_FS。Vout represents voltage of Vout, Vref the voltage of Vref, I_n the primary current, Voe the (Vout – Vref)@0A, G_th the theoretical gain, V_FS the rated output voltage.

9. Accuracy cross temperature

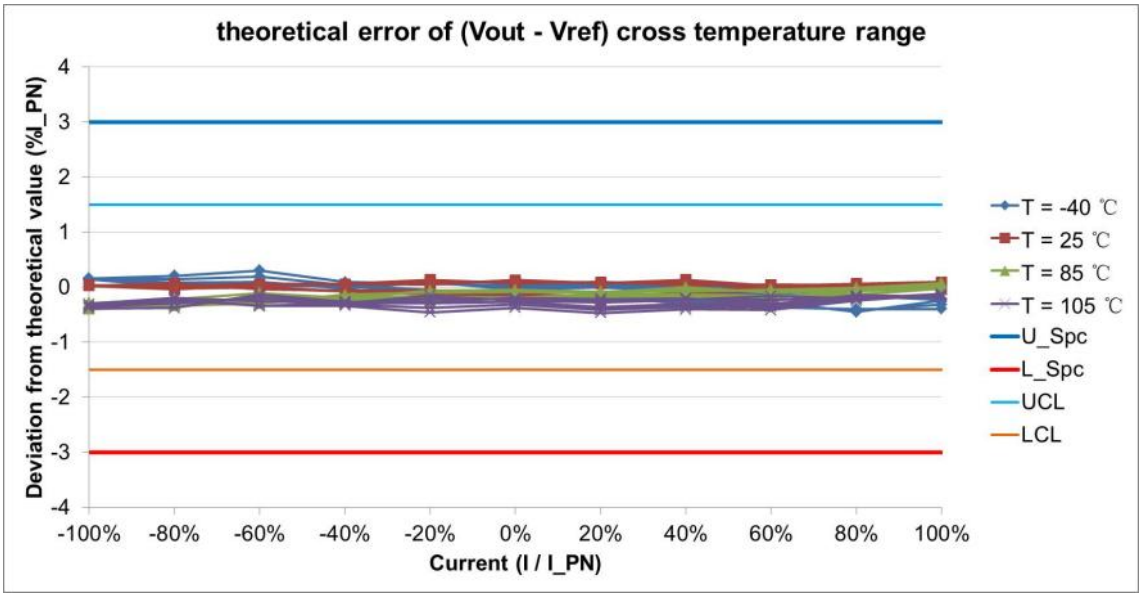

The error of STK-PL/M current sensor at -40℃ ~105℃ compared with the standard output at room temperature, ((Vout – Vref)_measure @ I_n @ T_x –Voe@ T_x– G_th * In) / V_FS. Where, Vout represents voltage of Vout, Vref the voltage of Vref, I_n the primary current, T_x the present temperature, Voe the (Vout – Vref)@0A, G_th the theoretical gain, V_FS the rated output voltage.

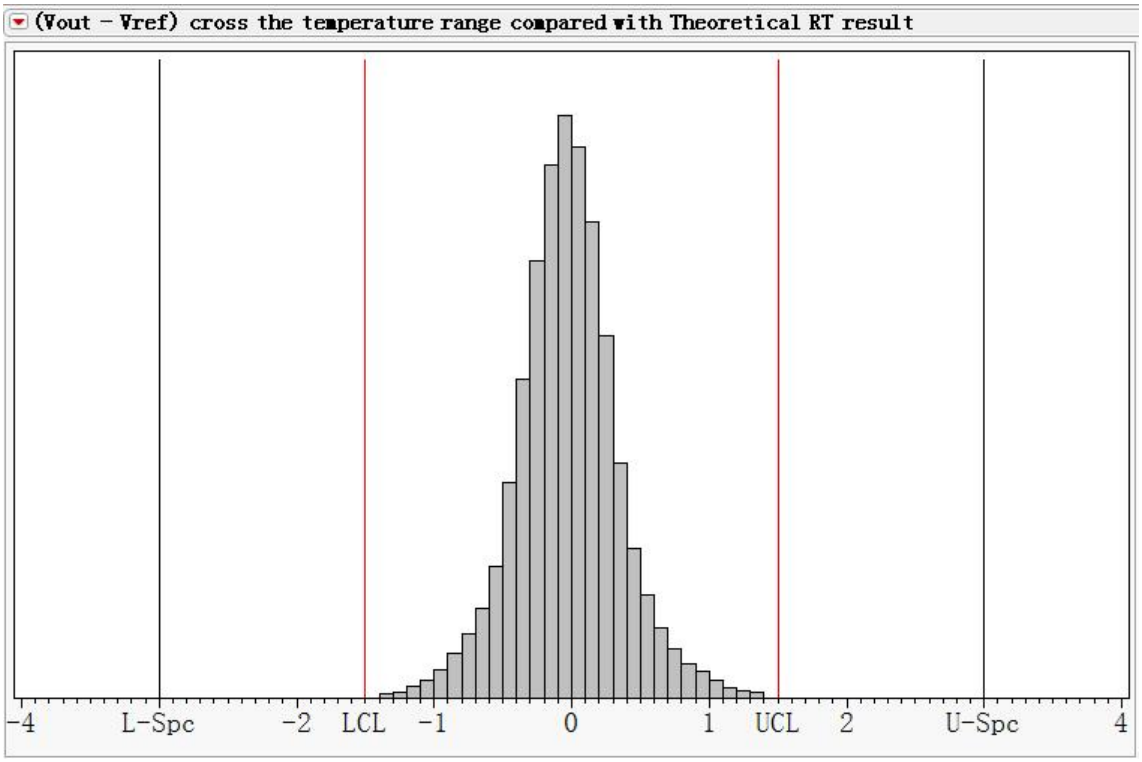

The error of STK-PL/M output (Vout – Vref) current sensor at -40℃ ~ 105℃ compared with the standard output (V = G_th * I_n), ((Vout – Vref) @ I_n @ T_x- G_th * I_n) / V_FS, Where, I_n represents present primary current, T_x the present temperature, G_th the theoretical gain, V_FS the rated output voltage.

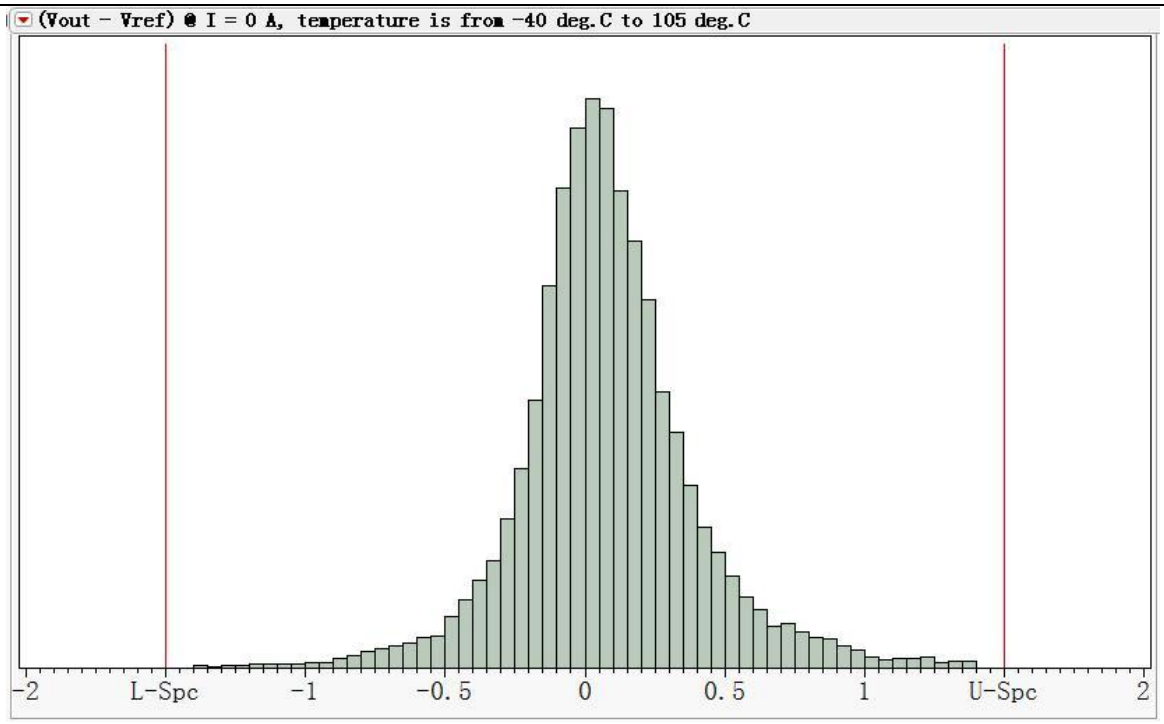

Temperature drift of Voe, Voe_TRange = (Voe @ T_x – Voe @ 25℃) / V_FS. T_x represents present temperature, V_FS the rated output voltage.

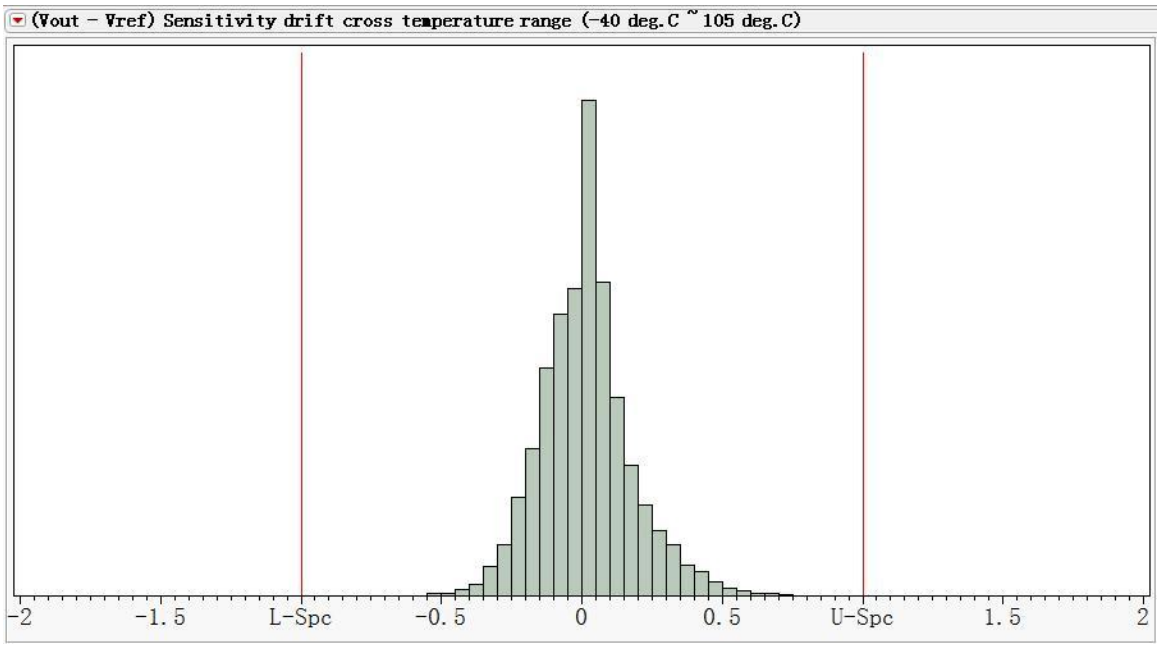

Error of gain, Err_G = ((((Vout – Vref) @ I_pn – (Vout – Vref) @(-I_pn)) / 2) – V_FS) / V_FS. Where I_pn represents the rated current, -I_pn the reversed rated current.

10. Frequency response and bandwidth

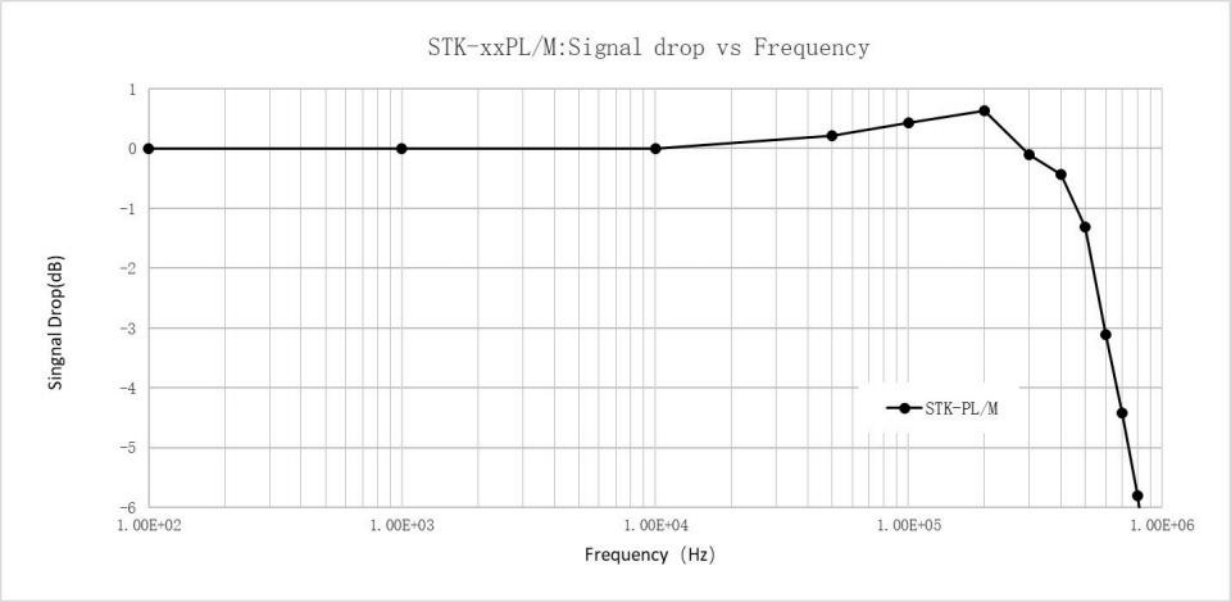

The frequency bandwidth of STK-xxPL/M series current sensor. The bandwidth of current sensor is DC ~ 500 kHz (-3dB).

11. Step response time

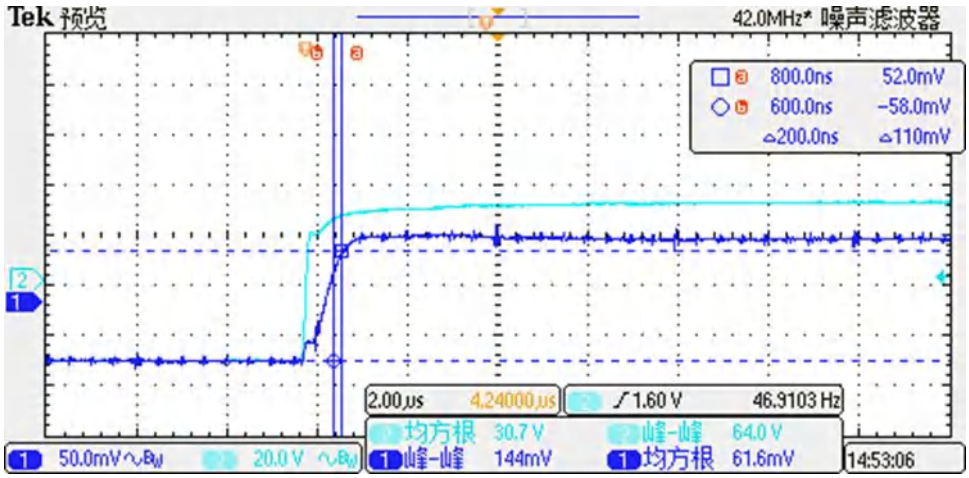

The typical frequency response of STK-xxPL/M current sensor. The response time from 90% of the primary current (light blue) to 90% of the secondary output (dark blue) is less than 1 µs

12. Frequency delay performance

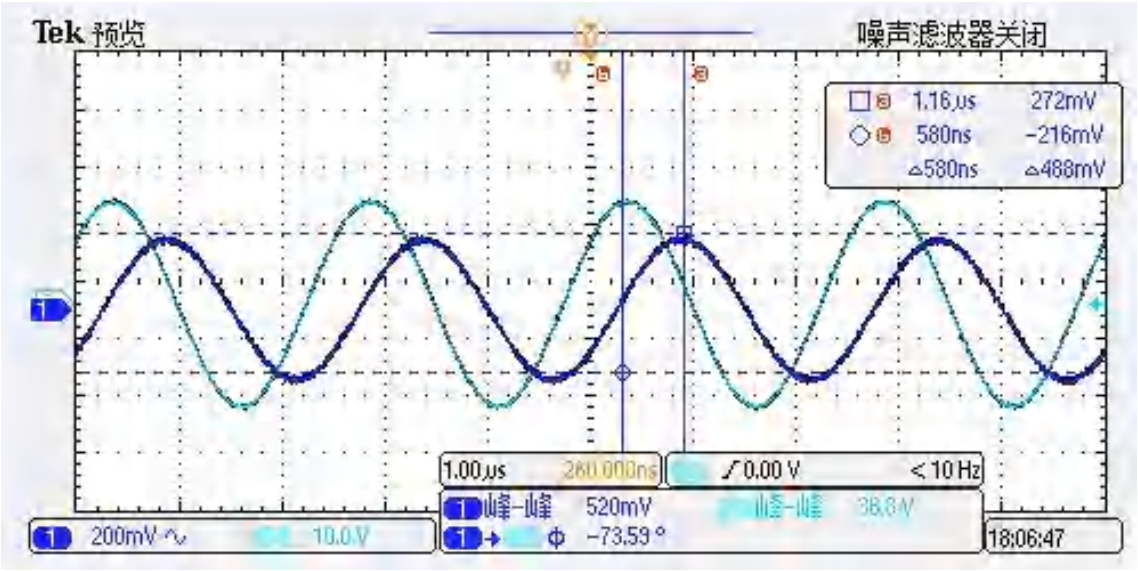

When testing 500 kHz sine wave, the typical result of STK-xxPL/M current sensor's output. The response time from the primary current (light blue) to the secondary output (dark blue) is less than 0.8μs.

13. Recommended PCB layout

Installation of view: overlooking (unit: mm)

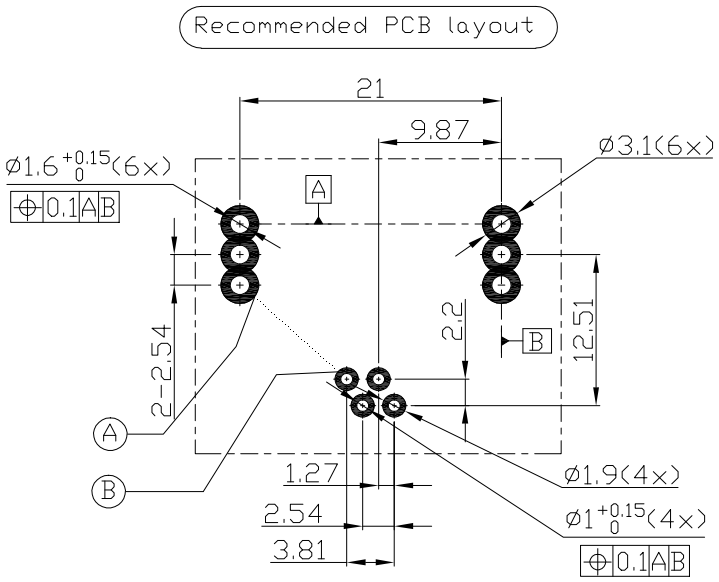

	d_{CI}(mm)	d_{Cp}(mm)
A-B	9.42	9.42

1. Installing angle：Overlook (observe from the side of installing transducer)
2. Recommended bore diameter of primary current line, (diameter of primary current × 1.2) mm
3. Recommended bore diameter of secondary current line, (diameter of secondary current × 1.2) mm
4. The maximum thickness of PCB is 2.5 mm
5. The curve of wave soldering: 260℃ × 10 s

Security：

This current sensor must be used in limited-energy secondary circuit according to IEC 61010-1.

- This current sensor must be used in electric/electronic equipment with respect to appliance standards and safety requirement in accordance with the manufacture's operating instructions;
- When operating the current sensor, certain parts of the module can carry hazardous voltage;
- Failure to wiring as shown in the diagram will damage the current sensor;
- Ignoring this warning can lead to serious consequences.
- A protective housing or a additional shield could be used.
- Main supply must be able to disconnected.

14. Dimension & Pin definitions

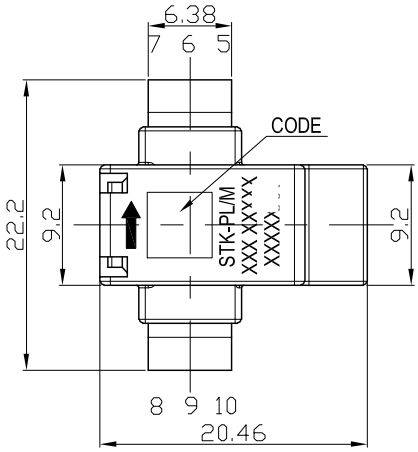

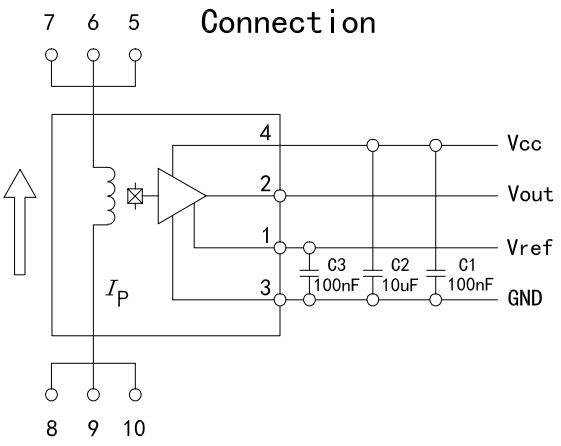

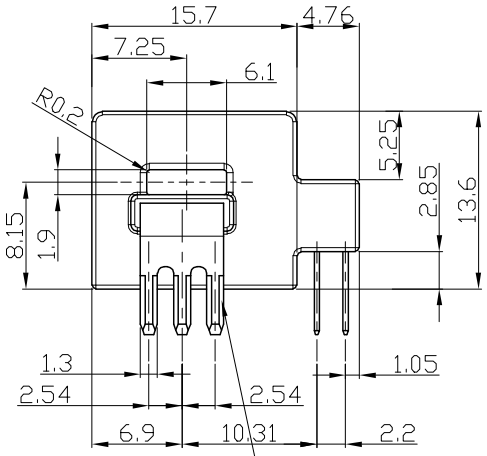

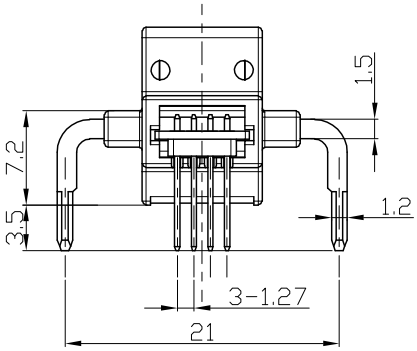

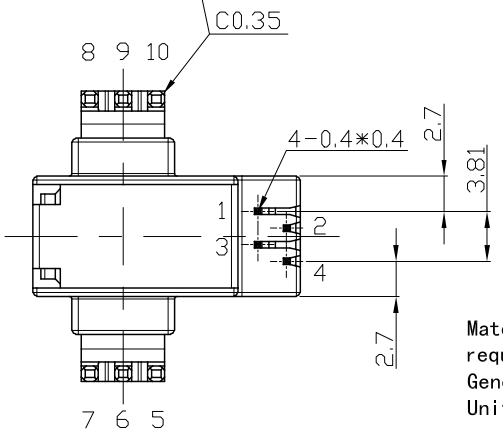

Terminal Pin Identification
1 : Vref
2 : Vout
3 : GND
4 : Vcc
5,6,7 : Primary input Current (-)
8,9,10 : Primary input Current (+)

Material : Fit UL94V-0 & RoHS requirements ;
General tolerance : ±0.5
Unit :mm

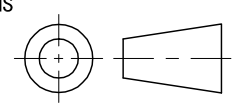

15. Appendix: typical application circuit

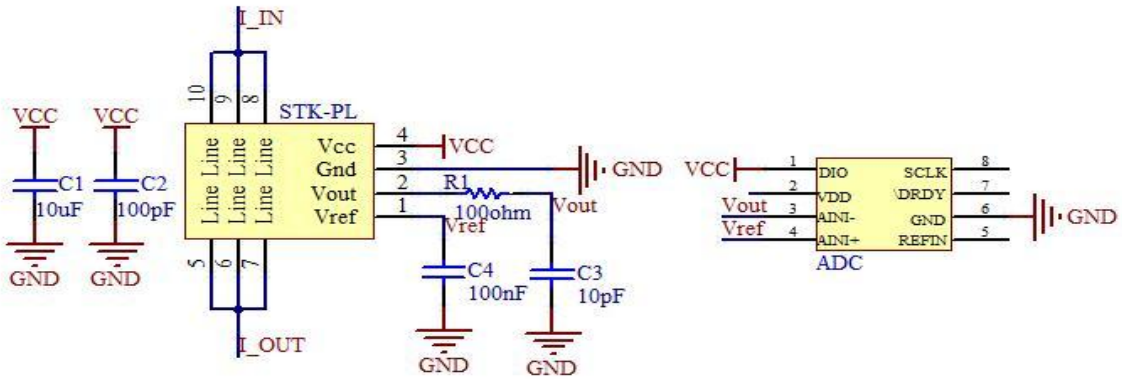

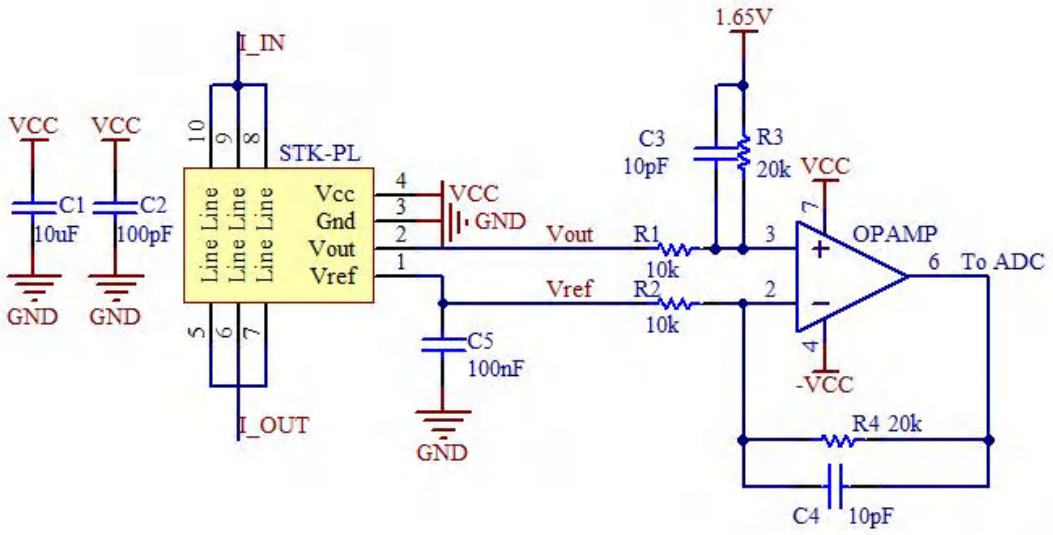

R3 (kohm)	C3 (nF)	Theoretical -3dB f = 1/(2πRC) (kHz)	Measured -3dB (kHz)
20	20	498	~500
20	81	98	~ 100
20	810	10	~ 10

The frequency characteristics of STK-xxPL/M series current sensor are not affected by the R-C setting (according to recommended R-C setting), therefore the active filter circuit or R-C circuit can be applied to modulate the sensor's frequency characteristics.

The signal input to ADC is 1.65+ R4/R2*(Vout-Vref) with the conditions: R1 = R2, R3 = R4, C3 = C4.